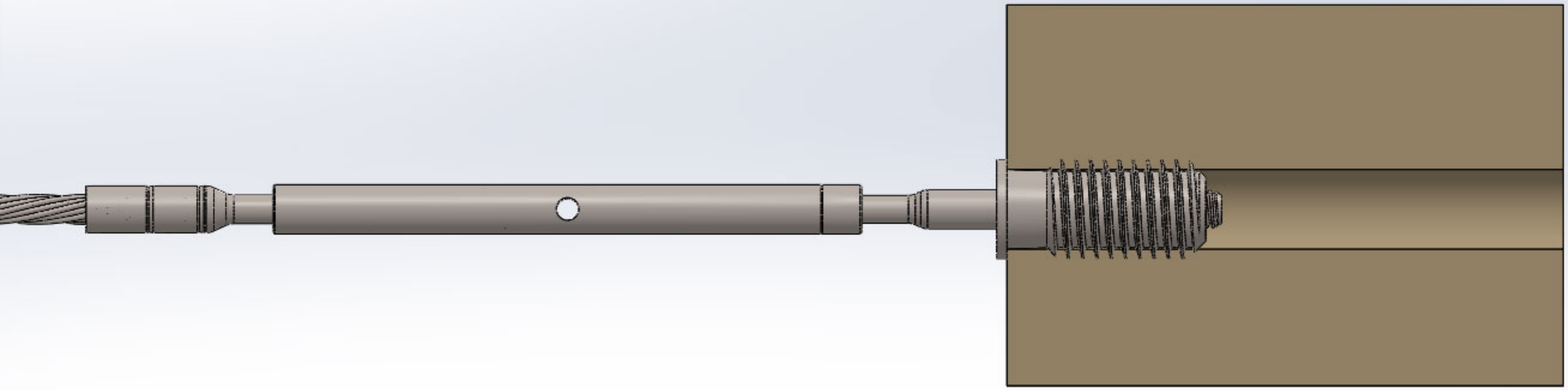

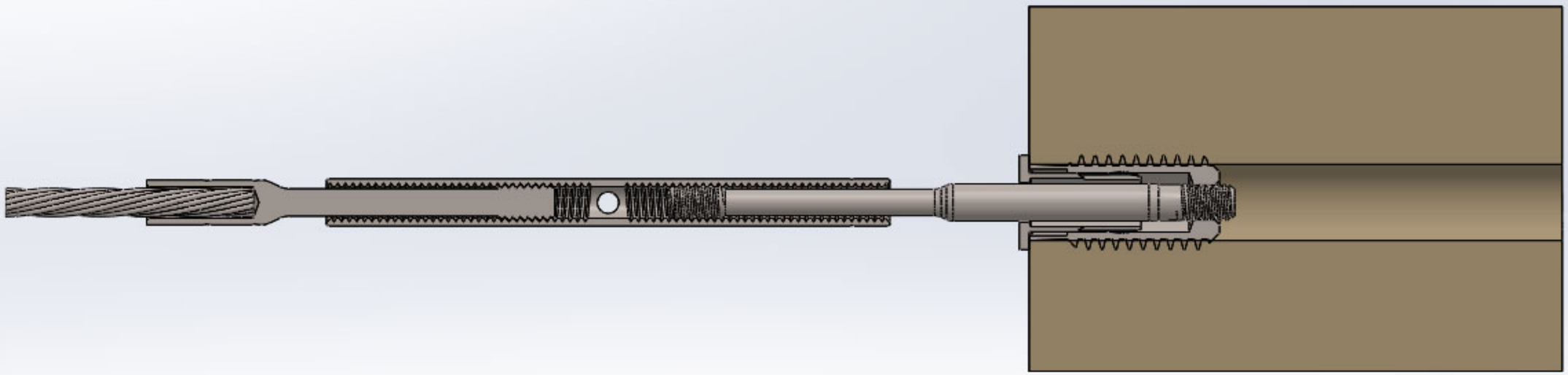

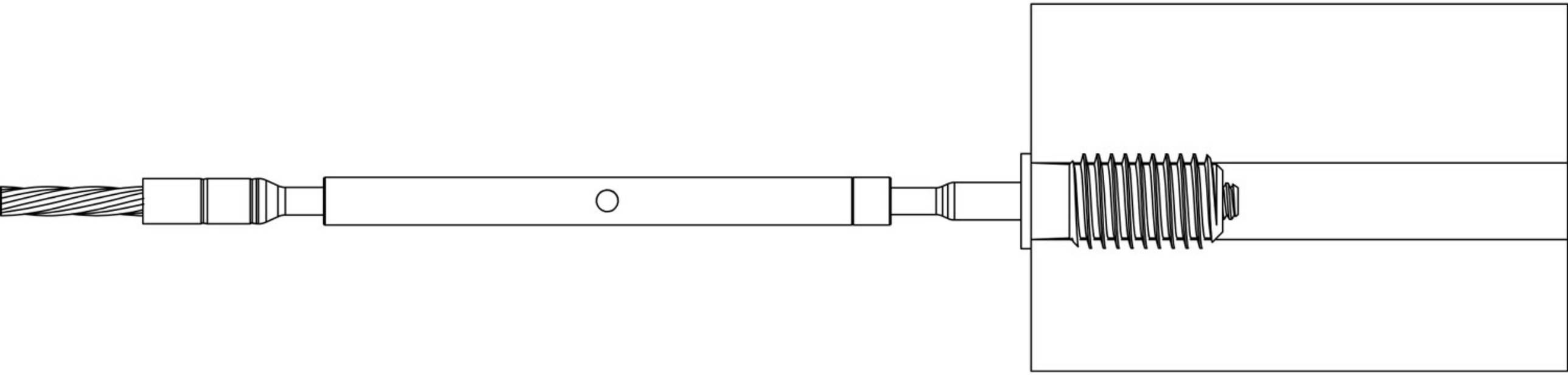

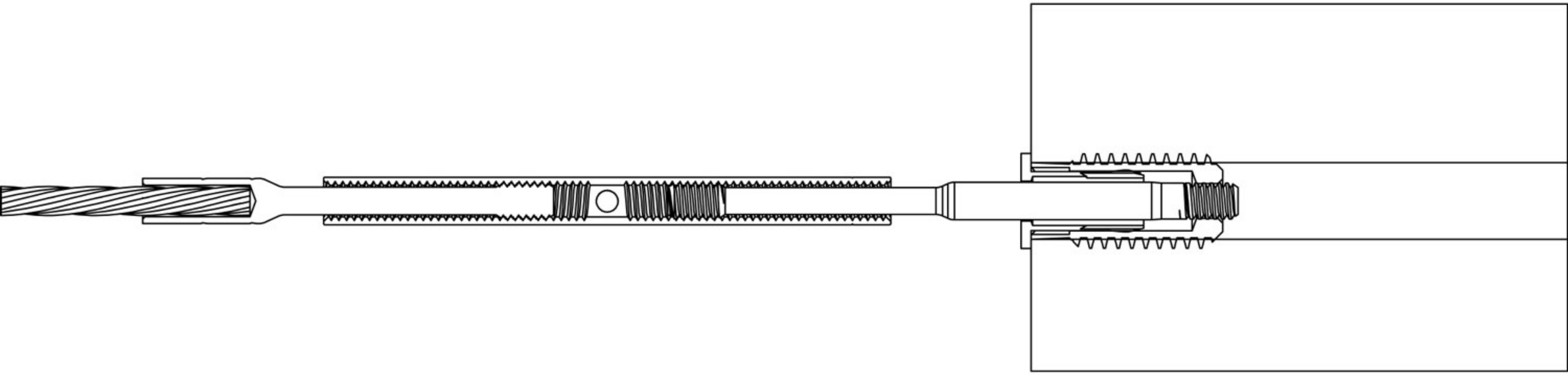

3/16" Turnbuckle Swage Stud
Item: HSC11902

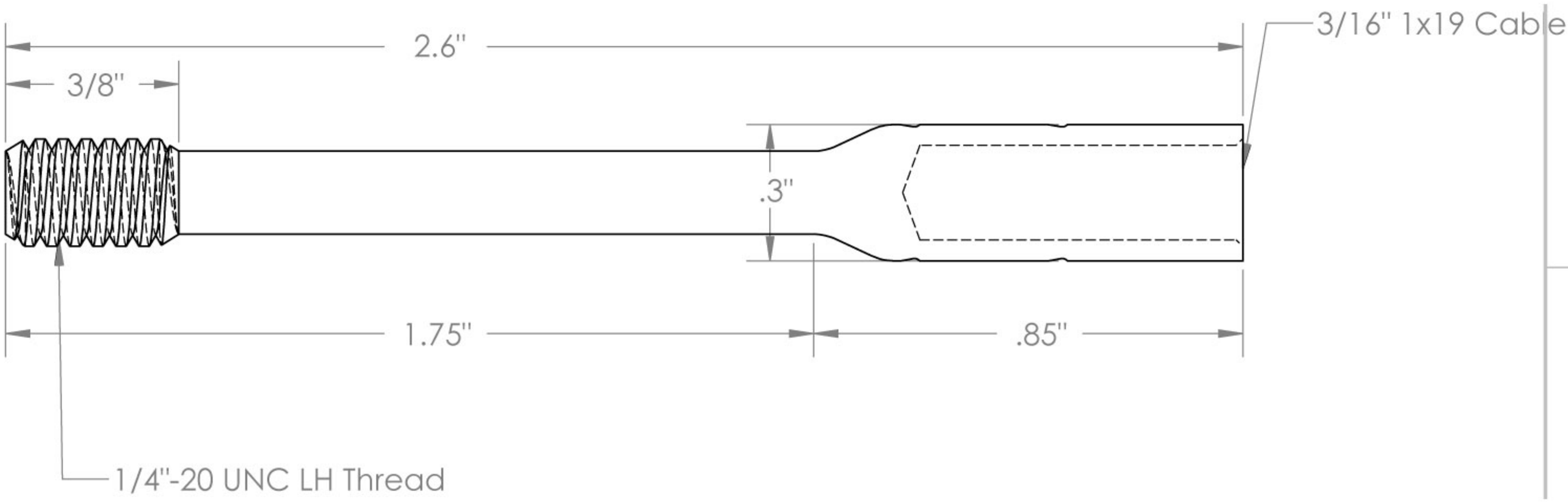

Lag Receiver
Item: HSC11500

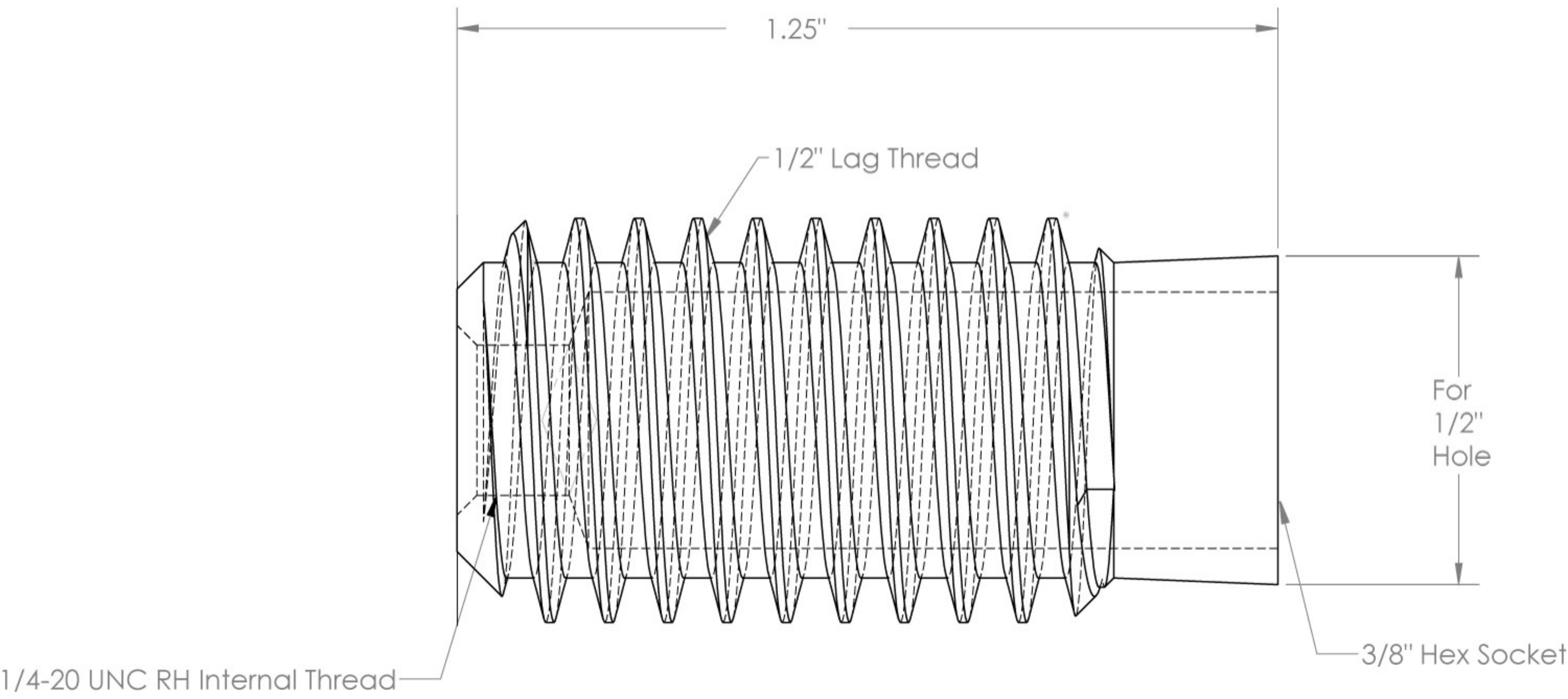

Turnbuckle Body
Item: HSC11800

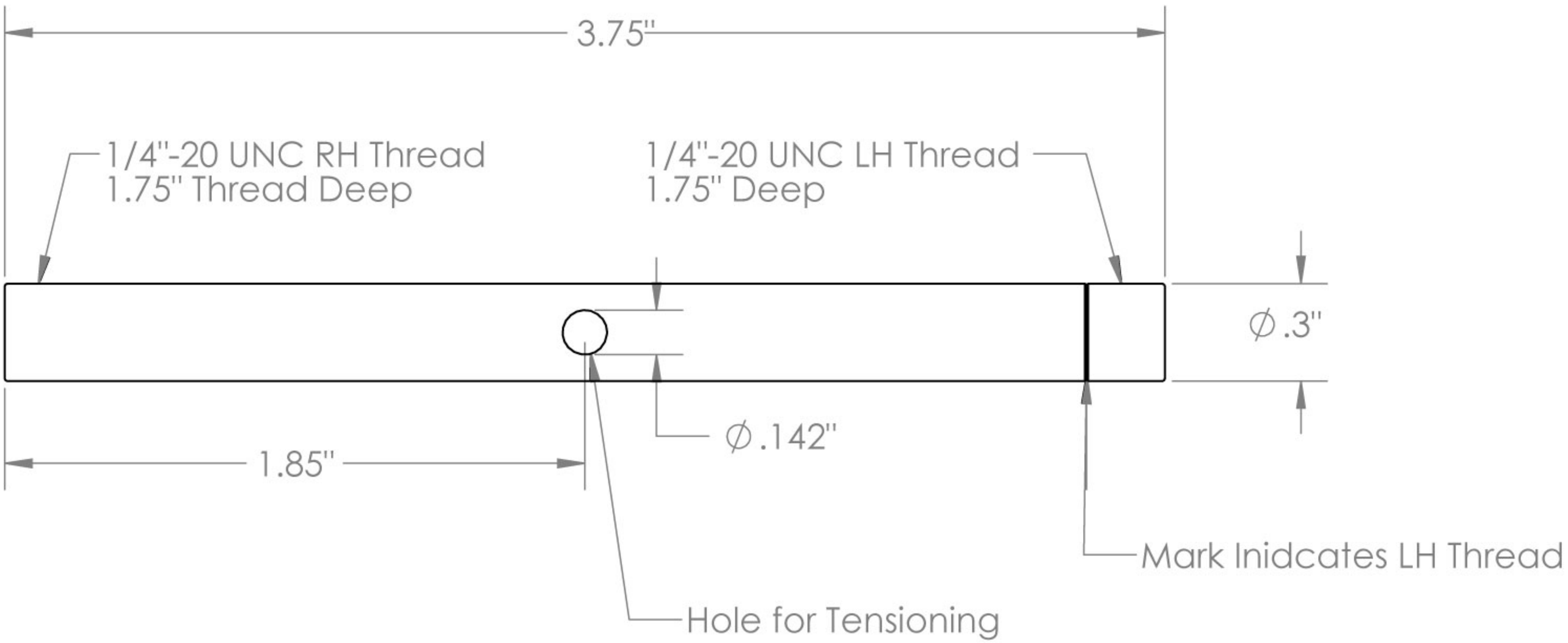

Turnbuckle Lag Receiver Cap
Item: HSC11600

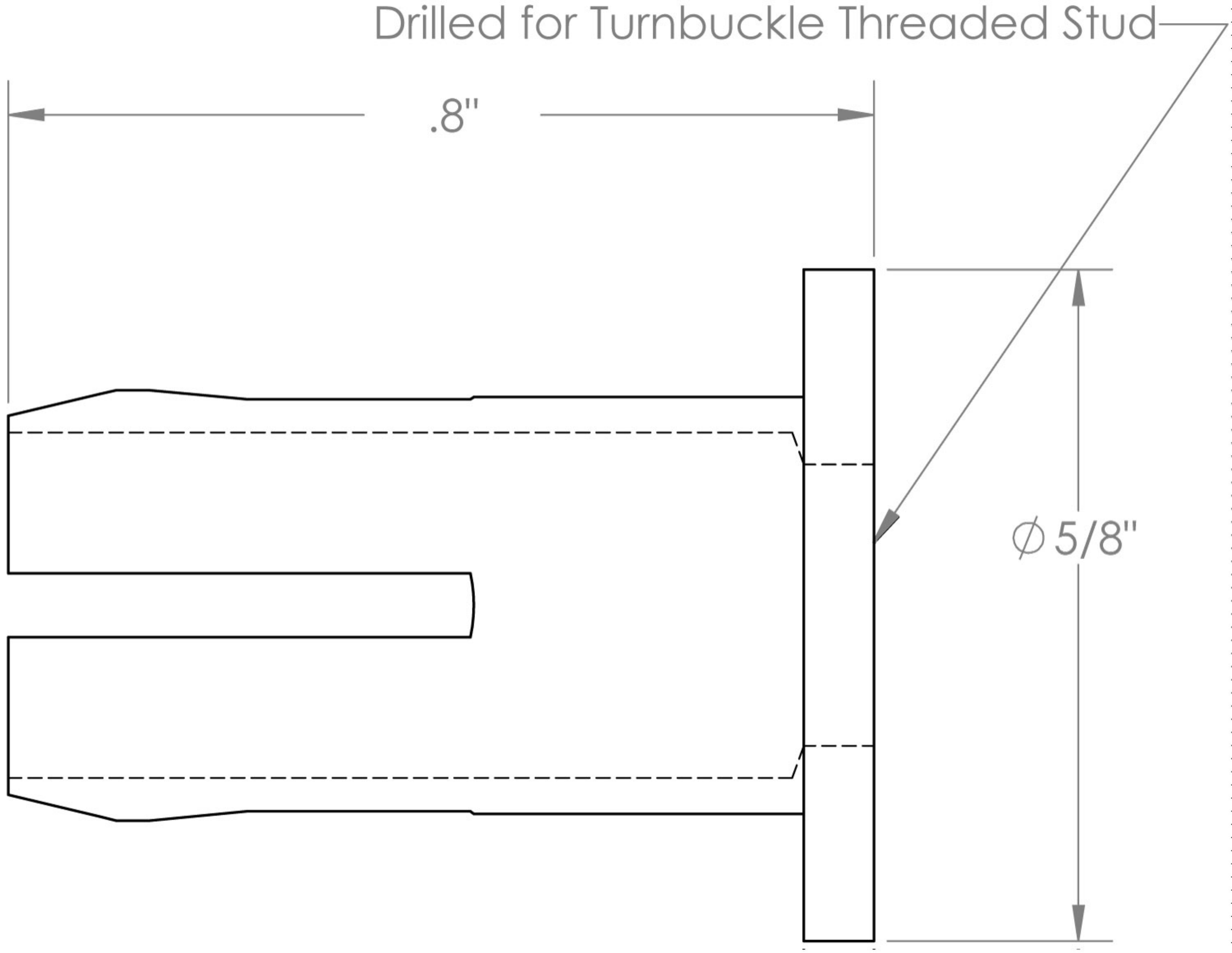
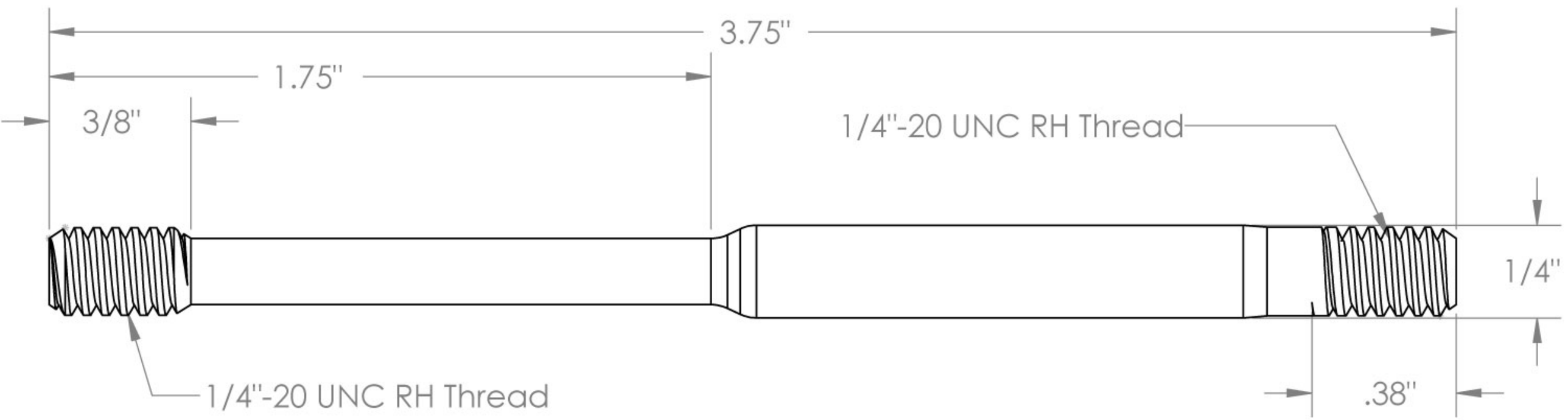
Turnbuckle Threaded Stud
Item: HSC11700